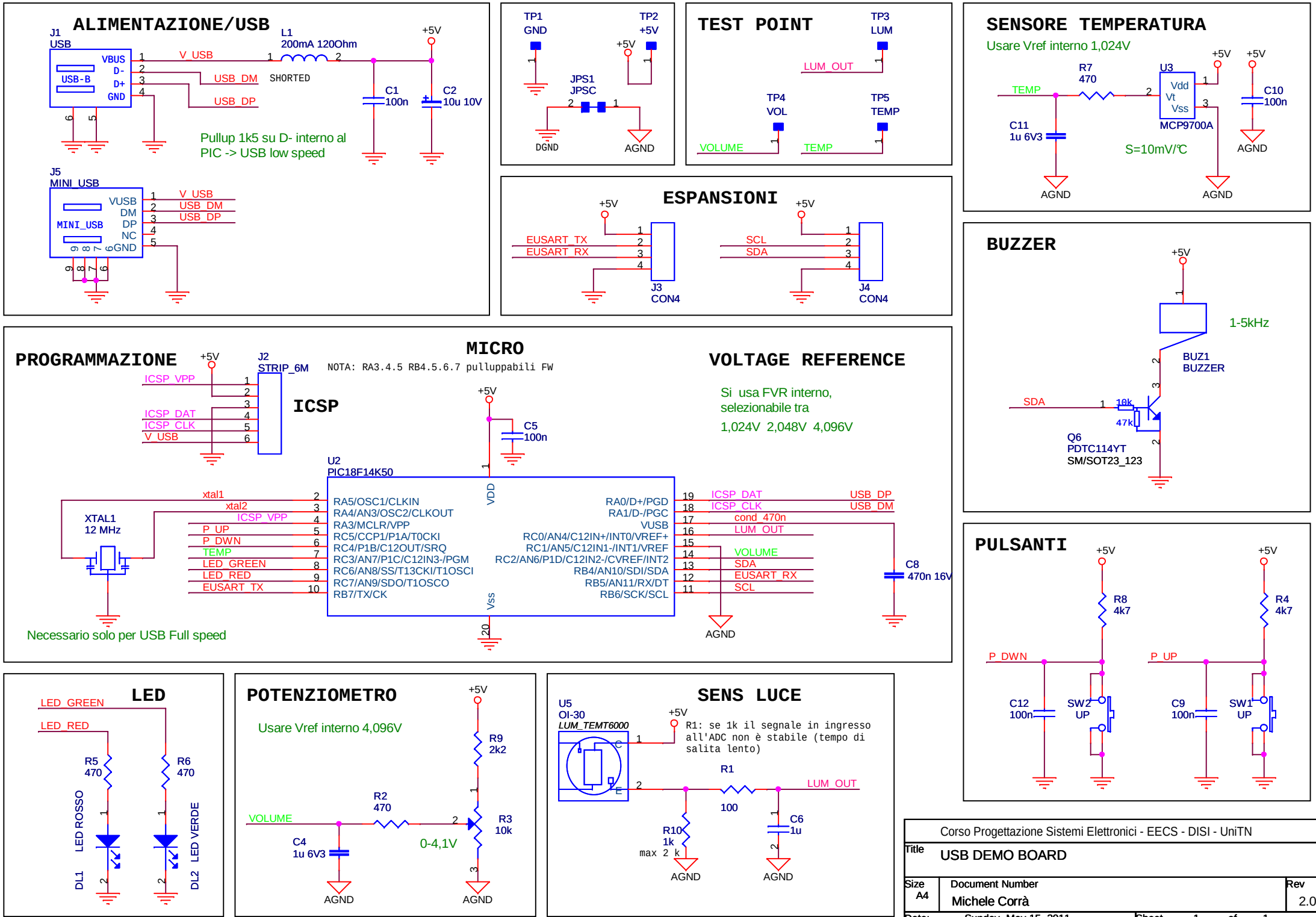
ALIMENTAZIONE/USB
J1
USB
USB-B
VBUS
D-
D+
GND
V_USB
USB_DM
USB_DP
L1
200mA 120Ohm
SHORTED
+5V
C1
100n
C2
10u 10V
Pullup 1k5 su D- interno al
PIC -> USB low speed
J5
MINI_USB
VUSB
DM
DP
NC
GND
TP1
GND
TP2
+5V
JPS1
JPSC
DGND
AGND
TEST POINT
TP3
LUM
LUM_OUT
TP4
VOL
TP5
TEMP
VOLUME
SENSORE TEMPERATURA
Usare Vref interno 1,024V
R7
470
U3
Vdd
Vt
Vss
MCP9700A
C10
100n
C11
1u 6V3
S=10mV/℃
ESPANSIONI
EUSART_TX
EUSART_RX
J3
CON4
SCL
SDA
J4
CON4
BUZZER
1-5kHz
BUZ1
BUZZER
10k
47k
Q6
PDTC114YT
SM/SOT23_123
PROGRAMMAZIONE
J2
STRIP_6M
ICSP_VPP
ICSP_DAT
ICSP_CLK
ICSP
MICRO
NOTA: RA3.4.5 RB4.5.6.7 pulluppabili FW
U2
PIC18F14K50
C5
100n
VDD
Vss
xtal1
xtal2
XTAL1
12 MHz
P_UP
P_DWN
TEMP
LED_GREEN
LED_RED
EUSART_TX
RA5/OSC1/CLKIN
RA4/AN3/OSC2/CLKOUT
RA3/MCLR/VPP
RC5/CCP1/P1A/T0CKI
RC4/P1B/C12OUT/SRQ
RC3/AN7/P1C/C12IN3-/PGM
RC6/AN8/SS/T13CKI/T1OSCI
RC7/AN9/SDO/T1OSCO
RB7/TX/CK
RA0/D+/PGD
RA1/D-/PGC
VUSB
RC0/AN4/C12IN+/INT0/VREF+
RC1/AN5/C12IN1-/INT1/VREF
RC2/AN6/P1D/C12IN2-/CVREF/INT2
RB4/AN10/SDI/SDA
RB5/AN11/RX/DT
RB6/SCK/SCL
ICSP_DAT
ICSP_CLK
USB_DP
USB_DM
cond_470n
LUM_OUT
VOLUME
SDA
EUSART_RX
SCL
C8
470n 16V
AGND
Necessario solo per USB Full speed
VOLTAGE REFERENCE
Si usa FVR interno,
selezionabile tra
1,024V 2,048V 4,096V
PULSANTI
R8
4k7
R4
4k7
P_DWN
P_UP
C12
100n
SW2
UP
C9
100n
SW1
UP
LED
LED_GREEN
LED_RED
R5
470
R6
470
LED ROSSO
LED VERDE
DL1
DL2
POTENZIOMETRO
Usare Vref interno 4,096V
R9
2k2
R2
470
R3
10k
VOLUME
C4
1u 6V3
0-4,1V
SENS LUCE
U5
OI-30
LUM_TEMT6000
R1: se 1k il segnale in ingresso
all'ADC non è stabile (tempo di
salita lento)
R1
100
LUM_OUT
R10
1k
max 2 k
C6
1u
Corso Progettazione Sistemi Elettronici - EECS - DISI - UniTN
Title
USB DEMO BOARD
Size
A4
Document Number
Michele Corrà
Rev
2.0
Date:
Sunday, May 15, 2011
Sheet
1
of
1